Taste and Teach

March - Green Beans

Five **Fun Facts** About Green Beans!

- Green beans, also referred to as snap beans, were named becuase of the snapping sound produced when breaking off the end of the pod.
- Most varities mature and are ready for harvest in 50-60 days.
- Green beans can be harvested by machine or by hand. Hand-harvesting allows for multiple harvest of a field, while machine harvest is a one-time operation.
- Approximately 95% of the green bean crop in California is for fresh market.
- Green bean pods can be green, purple/red, golden, or streaked, but the bean inside the pod is always green.

Four **Fun Teaching Ideas!**

- Watch this video on green beans from CFAITC: https://www.youtube.com/watch?v=WOhNv7Mr7Iw&t=2s
- Taste Test: Have students taste frozen, fresh and canned green beans. Record the simmilarities and differences.
- Have students build their own green bean planter using the “Get Growing” lesson in the “From Start-to-Finish: Producing, Preparing, & Preserving California Specialty Crops in the Classroom” Curriculum Unit.
- Measure the length, mass, and volume of different varities of green beans. Graph and compare the findings.

Explore all the great green bean resources in this section!

Learn About Ag®
California Foundation for Agriculture in the Classroom

Commodity Fact Sheet

Green (Snap) Beans

Information compiled by the California Foundation for Agriculture in the Classroom

How Produced – Snap beans, also referred to as green beans or string beans, are edible pod beans that can be grown as bush beans or pole (climbing) beans. California farmers primarily plant bush beans.

Snap beans are a warm season crop, with an ideal growing temperature that ranges from 65° to 85°F. The seed is planted as early as March and as late as August, depending on first and last frost. Seed is planted mechanically by a tractor pulling a planter. The beans are typically planted at 80 pounds per acre, depending on seed size, with two rows on each bed.

Most varieties mature in 50 to 60 days. High temperatures (above 90°F) and late season rains can cause blossoms to drop without the opportunity for fruit to set, greatly reducing yield. Since excess water at any time during growth can increase the plant's susceptibility to root rot infection, many growers use drip irrigation.

Snap bean pods are harvested two to three weeks after blooming. Marketable pods are fleshy, tender, and green for only a short period; they will quickly become tough, fibrous, and overmature if not harvested on time. Pods of desirable length, shape and width are selected, harvested, and graded. Harvesting can be done by hand or by machine. Hand-harvesting allows for multiple harvests of a field, while machine-harvesting is a one-time operation because the plants are destroyed in the process.

Snap beans are highly perishable and should be cooled quickly after harvest. Some growers practice field packing so snap beans are quickly moved from field to cooler with minimum handling. Snap beans destined for further processing are transported to a facility where they are sorted, washed, and trimmed prior to freezing or canning.

History – The common bean was cultivated in ancient Mesoamerica approximately 8,000 years ago. Beans were even found in the mummy covering of a woman in a Peruvian cemetery dating back to pre-Inca civilization. Snap beans originated in the tropical southern part of Mexico, Guatemala, Honduras, and Costa Rica. They spread from this center of origin to North and South America long before European explorers ever arrived.

When early explorers first returned home with these, natives of Central and South America and Europeans used them not as food crops but as ornamentals. They appreciated the butterfly-like blossoms in shades of red, pink, or white, but did not appreciate the tough texture of the pod.

Snap beans, by nature, had a fibrous strip that ran down the length of the bean. This portion had to be removed before it could be enjoyed. This led to the nickname "string beans." Botanists, however, found a way to remove the string through breeding and in 1894 the first "stringless" bean plant was cultivated. Today, commercial varieties of edible pod beans are grown without the strings.

Varieties – Snap bean varieties can be flat or round. The flat types, called Kentucky Wonder, include varieties such as Magnum, Greencrop, and Calgreen. The round types, called Blue Lake, include Benchmark, Strike, and Landmark. Yellow-podded varieties are Goldrush and Slenderwax. A popular Italian flat bean variety is Romano. Snap beans also come in purple-podded varieties. The purple pods are flavorful, and turn green when cooked.

Commodity Value – California is ranked second in the nation for production of fresh market snap beans, while Florida is the top producer. Approximately 95% of the snap bean crop in California is marketed as fresh, with the remainder marketed for processing. In 2018, California's snap bean growers harvested more than 50,900 tons on 7,900 acres throughout the state. The state's crop value reached $69 million in 2018.

Top Producing Counties – Snap beans are produced in many areas of California. Primary production areas include Tulare County, Riverside County, and Orange County.

Nutritional Value – A 1/2 cup serving of snap beans is a good source of fiber, folate, and beta-carotene. Our bodies use beta-carotene to make vitamin A, a nutrient important for vision, immune function, and skin and bone health. Snap beans also contain small amounts of calcium and vitamin C. Green, yellow, and purple snap beans are similar in taste, texture, and nutrition.

For additional information:
Orange County Produce
Website: ocproduce.com

07/20 Learn About Ag

This is one in a series of fact sheets composed by the California Foundation for Agriculture in the Classroom (CFAITC). For additional educational materials: CFAITC, 2600 River Plaza Drive, Suite 220, Sacramento, CA 95833-3293 (916) 561-5625 (800) 700-AITC Fax: (916) 561-5697 Email: info@learnaboutag.org Website: LearnAboutAg.org

Green (Snap) Beans Activity Sheet

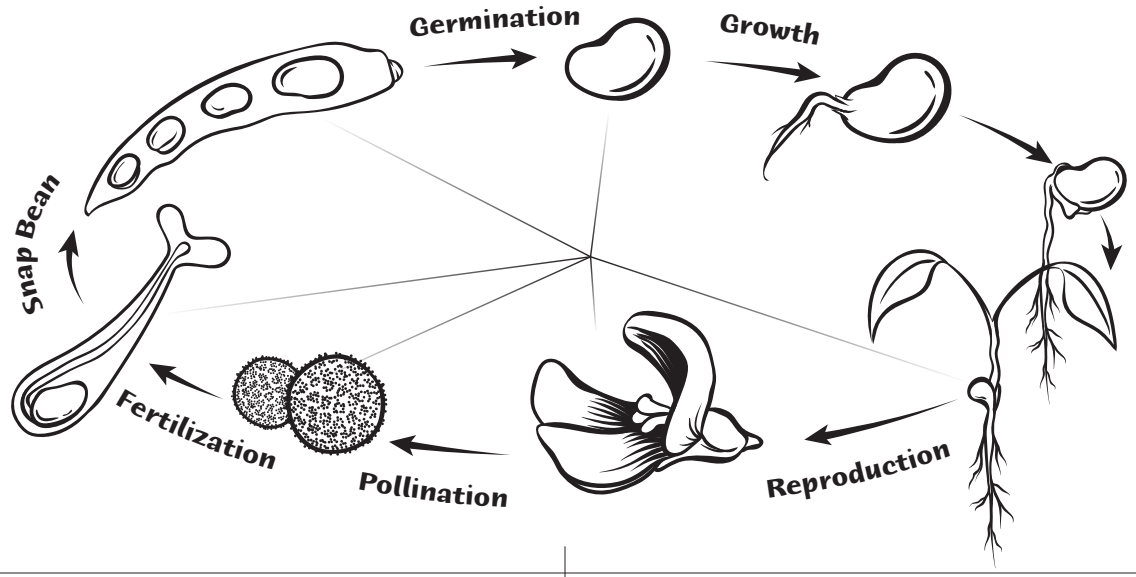

Lesson Ideas

- Dissect a bean and record observations in a science journal. Include labeled diagrams.
- Germinate beans in a damp paper towel inside of a plastic sandwich bag. Tape the bag to a window and make daily observations of bean growth.
- Compare different varieties of snap beans. Make a table to organize data such as color, shape, number of beans, length, and taste.
- Measure the length, mass, and volume of snap bean pods. Create a class average and discuss how common traits have been established through science.
- Design an experiment that identifies the best practices for fresh snap bean storage. Share your findings with your school's food service workers.
- Taste frozen, fresh, and canned snap beans. Record similarities and differences.

Fantastic Facts

1. Snap beans were named for the snapping sound produced when breaking off the end of the pod.
2. The pod color of snap beans can be green, golden, purple/red, or streaked, but the beans inside the pod are always green.
3. Snap beans are nitrogen fixers, which means they draw nitrogen from the air and return it to the soil. Farmers often plant beans to replenish the soil.
4. The Asian Yardlong variety of snap beans have pods that measure up to 18 inches long.
5. The Spaniards initially used snap beans as ornamental plants because they found the bean pods tough, but very much liked the flowers.
6. Snap beans are the third most commonly grown home garden vegetable in the United States, outranked only by tomatoes and peppers.

Lesson Plan: Oh Snap! Finding the Right Soil for Snap Beans

Introduction: Snap beans are grown on many soil types in a pH range of 5.5 to 7.5. Well-drained soils are preferred. Excessively wet soils encourage root diseases and nutrient problems. Snap beans have a semi-shallow root system, and the crop requires frequent irrigation.

Objective: Students will investigate how snap beans grow in different soil types.

California Standards: CC Math: 7.SPC.8; NGSS: MS-LS1-5

Materials: Four identical containers (per group), potting soil, sandy soil, clay soil, snap bean seeds, tray for pots

Procedure:

1. Divide students into groups. Distribute snap bean seeds and containers.
2. Instruct students to fill each container with the same volume of soil, using each of three available soil types. Students must label each container properly.
3. The fourth container will have a student-designed mixture of the three soil types. Have students record the ratios and label the container.
4. Plant the snap beans in each container, at a depth of one inch.
5. Ask students to identify techniques for measuring plant growth. As a class, determine which techniques will be used to measure plant growth in this experiment. These techniques may include: measuring plant height, counting leaves, determining surface area of leaves, observing plant color, or identifying number of days to flower.
6. Apply the same volume of water to the plants at consistent intervals.
7. Routinely employ techniques to measure plant growth, and record measurements in science journals.
8. Use data to graph results and summarize findings.

07/20 Learn About Ag This Fact and Activity Sheet was developed by California Foundation for Agriculture in the Classroom in conjunction with California educators and meets the required education standards of the California Department of Education.

LESSON TITLE:

GET GROWING

Grade Level: 5-8

THREE OR FOUR
50-MINUTE LESSONS

LESSON OBJECTIVES:

- **Students will know planting specifications for green bean seeds.**
- **Students will design a green bean planter that meets set criteria and constraints.**
- **Students will solve mathematical challenges related to agricultural production.**
- **Students will understand the importance of engineering in agricultural production.**

STANDARDS

- NGSS: MS-ETS1-1: Define the criteria and constraints of a design problem with sufficient precision to ensure a successful solution, taking into account relevant scientific principles and potential impacts on people and the natural environment that may limit possible solutions.

- NGSS: MS-ETS1-2: Evaluate competing design solutions using a systematic process to determine how well they meet the criteria and constraints of the problem.

- NGSS: MS-ETS1-3: Analyze data from tests to determine similarities and differences among several design solutions to identify the best characteristics of each that can be combined into a new solution to better meet the criteria for success.

- CC Math: 5.NBT.5: Fluently multiply multi-digit whole numbers using the standard algorithm.

- CC Math: 5.NBT.7: Add, subtract, multiply, and divide decimals to hundredths, using concrete models or drawings and strategies based on place value, properties of operations, and/or the relationship between addition and subtraction; relate the strategy to a written method and explain the reasoning used.

- CC Math: 5.MD.1: Convert among different-sized standard measurement units within a given measurement system (e.g., convert 5 cm to 0.05 m), and use these conversions in solving multi-step, real world problems.

- CC Math: 6.NS.2: Fluently divide multi-digit numbers using the standard algorithm.

- CC Math: 6.RP.3: Use ratio and rate reasoning to solve real-world and mathematical problems, e.g., by reasoning about tables of equivalent ratios, tape diagrams, double number line diagrams, or equations.

- CC Math: 7.NS.3: Solve real-world and mathematical problems involving the four operations with rational numbers.

GET GROWING

MATERIALS

- Chart paper or blackboard, with markers or chalk
- Handout: *The Planter Challenge* (one per student)
- Green bean seeds (one packet per group)
- Materials that can be used to create a simple machine. Choose some of the following: duct tape, clear tape, straws, toilet paper tubes, small and large cups, corrugated cardboard, plastic wrap, tin foil, newspaper, scissors, single-hole punch, paper clips, rubber bands, washers, wooden skewers, brass fasteners, string, card stock.

BACKGROUND INFORMATION

Green beans, also called snap beans, are edible pod beans that can be grown as bush beans or pole (climbing) beans. California farmers primarily plant bush beans. The seed is planted as early as March and as late as August, depending on first and last frost.

Seed is planted mechanically by a tractor pulling a machine called a planter. Planters place each green bean seed an optimal distance apart to yield the most beans per acre. The planter looks very complex, yet the basic concept is a simple machine that makes production of green beans more efficient and easier for the farmer. The beans are planted at 80 pounds per acre, two lines (rows) per 38-inch bed at six to eight seeds per foot. There are approximately 2,000 seeds per pound, depending on seed size.

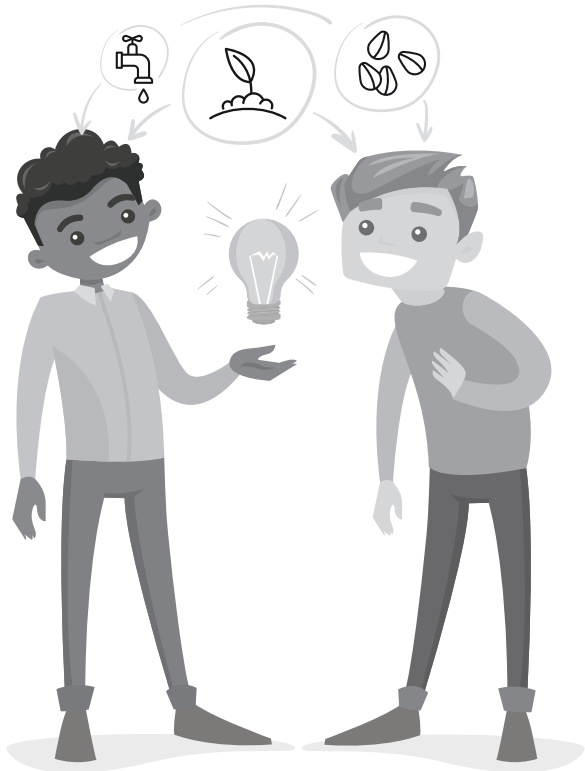

In this lesson, students will design a simple green bean planter. They will complete the design process by defining the problem, developing possible solutions, and improving their design. By the end of the lesson, students will appreciate how simple machines make life easier.

PROCEDURE (PART 1)

1. Introduce the challenge. Tell students they will be building a green bean planter that will mechanically drop three or more seeds onto a piece of masking tape.

2. Engage students by reviewing the six types of simple machines. Write the names of each simple machine on the board, and invite students to give examples for each. If possible, also show an example of each simple machine.

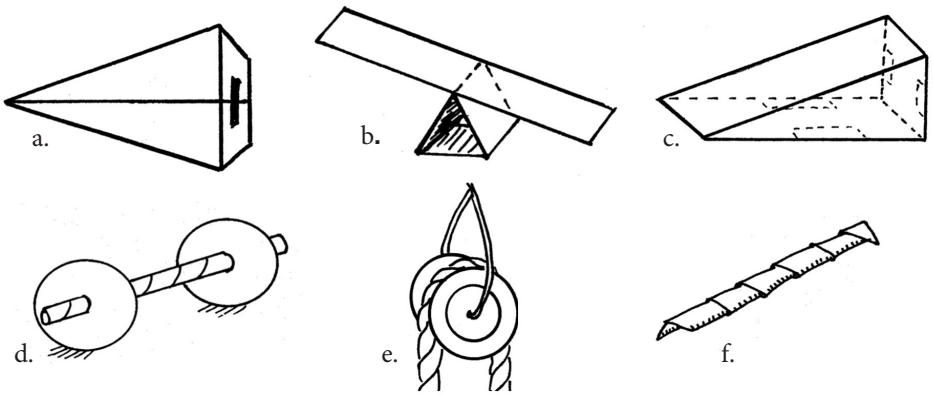

a. Wedge: Used to separate two objects, lift an object, or hold an object in place. *(Example: rubber door stop)*
b. Lever: Used to move an object or lift a load. *(Example: pliers)*
c. Inclined Plane: Used to lift or lower a load. *(Example: slide)*
d. Wheel and Axle: Used to reduce friction when an object is moved horizontally. *(Example: bicycle)*
e. Pulley: Used to reverse the direction of the lifting force—if you want to lift something up, you use force to pull down. *(Example: flagpole)*
f. Screw: Used to compress two objects or hold an object in place. *(Example: a jar and lid)*

3. Show students the materials and ask, *"How can you make a simple green bean planter from these materials?"* Give students additional design parameters and performance parameters:

a. The seeds must be dropped by the machine.
b. The seeds must be dropped in intervals.
c At least one simple machine must be employed.
d. You may only use the materials provided to the class.

After discussing their ideas, distribute *The Planter Challenge* handout and instruct students to complete the *Brainstorm and Design* section.

4. Have students explain their initial planter design to groups of three or four students. After each individual idea is explained, have the student groups create a group prototype which could include selecting one design to move forward with, or combining pieces from multiple student designs and creating a new prototype. Have students draw their proposed group design on *The Planter Challenge* handout.

5. Allow students 20 minutes to build and test their prototype. Remind students to follow their group prototype design, testing periodically and redesigning as necessary. Design problems and

solutions must be noted on *The Planter Challenge* handout in the *Build, Test, Evaluate, and Redesign* section. If needed, adjust time and material constraints to meet the needs of the students.

6. Evaluate student designs by having groups demonstrate their planter prototypes and determine if they meet design parameters and performance expectations.

7. Invite students to share their designs and how they solved any problems that came up. Emphasize the key themes in this challenge—using simple machines and achieving precise results—by asking questions such as:

a. *What limited your design solutions?*
b. *What methods did you use to move the seed precisely onto the target row?*
c. *What strategies were successful for planting one seed at a time?*
d. *How did your understanding of simple machines influence the design of your planter?*

8. Instruct students to complete the *Reflection* section on *The Planter Challenge* handout. Assess student work for completeness and accuracy.

PROCEDURE (PART 2)

1. Explain to students that having access to a machine that plants green bean seeds is important to farmers. Additionally, there is a great amount of planning that needs to happen before the planter can enter the field.

2. Distribute *The Math Challenge* handout. Read the introduction together, and instruct students to solve the problems independently.

3. Lead a class discussion on why we use machines and how long it would take students if they had to plant the seeds by hand. Have students synthesize information and share the importance of using machines in agricultural production.

VARIATION

Take the lesson outside and have students test their planter prototypes in a garden bed. Cover the seeds with soil and apply water. Routinely care for the plants and enjoy a harvest of green beans.

EXTENSIONS

• YouTube hosts a variety of videos that show commercial green bean planters in action! Share one of these videos with your students, then create a simple Venn diagram to illustrate the similarities and differences between student designs and commercially adopted designs.

• Gather different types of green bean seeds and classify them according to size, coating, color, etc.

• Explain to students that engineers must be mindful of design costs. Have students determine the cost of their prototype.

MATH CHALLENGE ANSWER KEY:

(FOR PAGE 10)

1. 6,580,000 seeds	4. 2,047,320 square feet
2. 3,290 pounds	5. 31 miles
3. $24,675.00	6. 5 hrs and 10 mins

THE PLANTER CHALLENGE

INTRODUCTION:

ADDITIONAL PARAMETERS AND EXPECTATIONS:

- The seeds must be dropped by the machine
- The seeds must be dropped in intervals
- At least one simple machine must be employed
- You may only use the materials provided to the class

BRAINSTORM AND DESIGN

1. How will the planter move down the row?

2. What's the best way to make a single seed drop?

3. How will you direct the seed onto the masking tape?

DESIGN A GROUP PROTOTYPE

BUILD, TEST, EVALUATE, AND REDESIGN

Use the materials to build your planter. Then test it by adding seeds and dropping them in a line. When you test, your design may not work as planned. When engineers solve a problem, they try different ideas, learn from mistakes, and try again. The steps they use to arrive at a solution is called the design process. Study the problems and then redesign.

FOR EXAMPLE, IF...

DESIGN PROBLEMS	OUR SOLUTIONS

REFLECTION

Name: _____ Date: _____ Class: _____

THE MATH CHALLENGE

INTRODUCTION: FARMERS USE A SIGNIFICANT AMOUNT OF MATH IN THEIR DAILY OPERATIONS. SOLVE THE PROBLEMS BELOW. SHOW YOUR WORK AND INCLUDE UNITS IN YOUR ANSWERS.

1. A farmer is planting a 47-acre field of green beans. How many seeds must be purchased if the farmer plants 140,000 seeds per acre?

2. Green bean seeds are sold in pounds. There are approximately 2,000 seeds per pound, depending on seed size. How many pounds should the farmer purchase?

3. The price of green bean seed is $37.50 for a five-pound bag. How much will it cost to plant the entire field?

4. An acre is an area of land equivalent to 43,560 square feet. What is the area, in square feet, of the farmer's field?

5. There are 351 rows in the field. Each row is 1,400 feet long. The planter can plant three rows at the same time. How many miles will the tractor drive to plant the entire field? *Hint: There are 5,280 feet in one mile.*

6. If a tractor travels at 6 MPH, how long will it take to plant the entire field?